Energizer

EVEREADY GOLD ALKALINE AA

AA

General Information

Classification:	Alkaline
Chemical System:	Zinc-Manganese Dioxide (Zn/MnO_2) No added mercury or cadmium
Designation:	ANSI-15A, IEC-LR6
Nominal Voltage:	1.5 volts
Nominal IR:	150 to 300 milliohms (fresh)
Operating Temp:	-18°C to 55°C (0°F to 130°F)
Typical Weight:	23.0 grams (0.8 oz.)
Typical Volume:	8.1 cubic centimeters (0.5 cubic inch)
Shelf Life:	5 years at 21°C

Industry Standard Dimensions

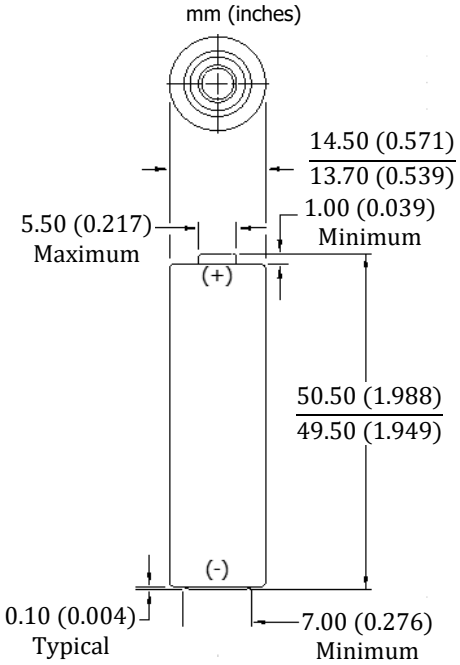

Milliamp-Hours Capacity

Continuous discharge to 0.8 volts at 21°C

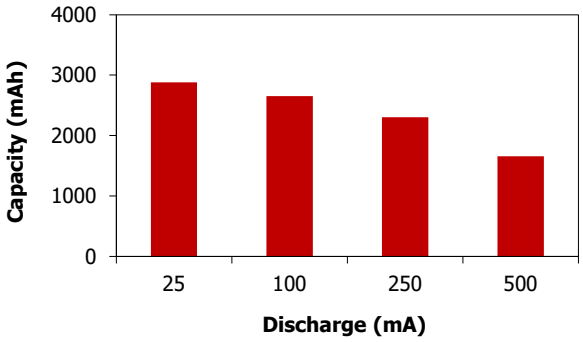

Industry Standard Tests (21°C)

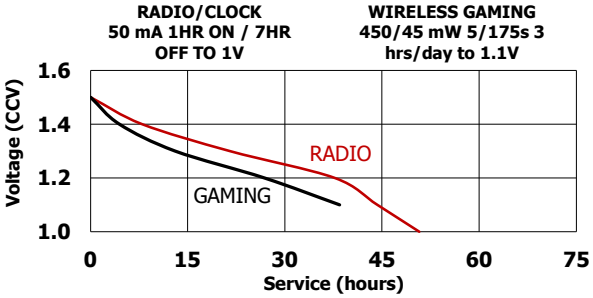

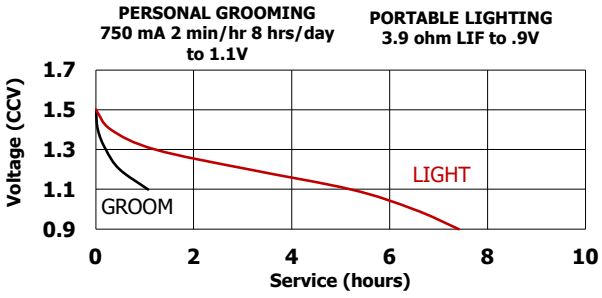

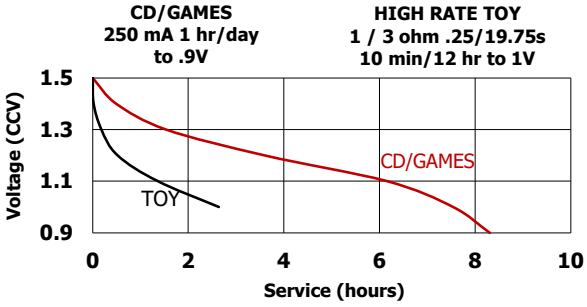

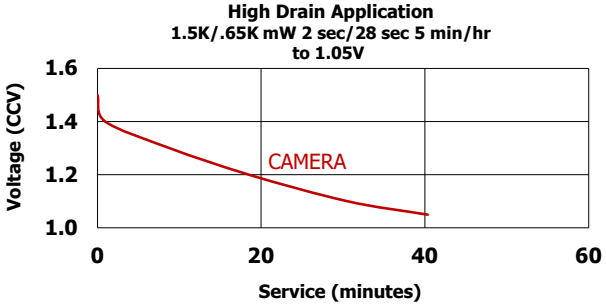

Important Notice

This data sheet contains typical information specific to products manufactured at the time of its publication.

Contents herein do not constitute a warranty and are for reference only.